PARTS LIST NO. 530165351-01		WEED EATER® PARTS LIST	Blower Model(s): EBV200
DATE 06/23/04	NEW	**Note:** Illustration may differ from actual model due to design changes	Page 1

⚠ WARNING

All repairs, adjustments and maintenance not described in the Operator's Manual must be performed by qualified service personnel.

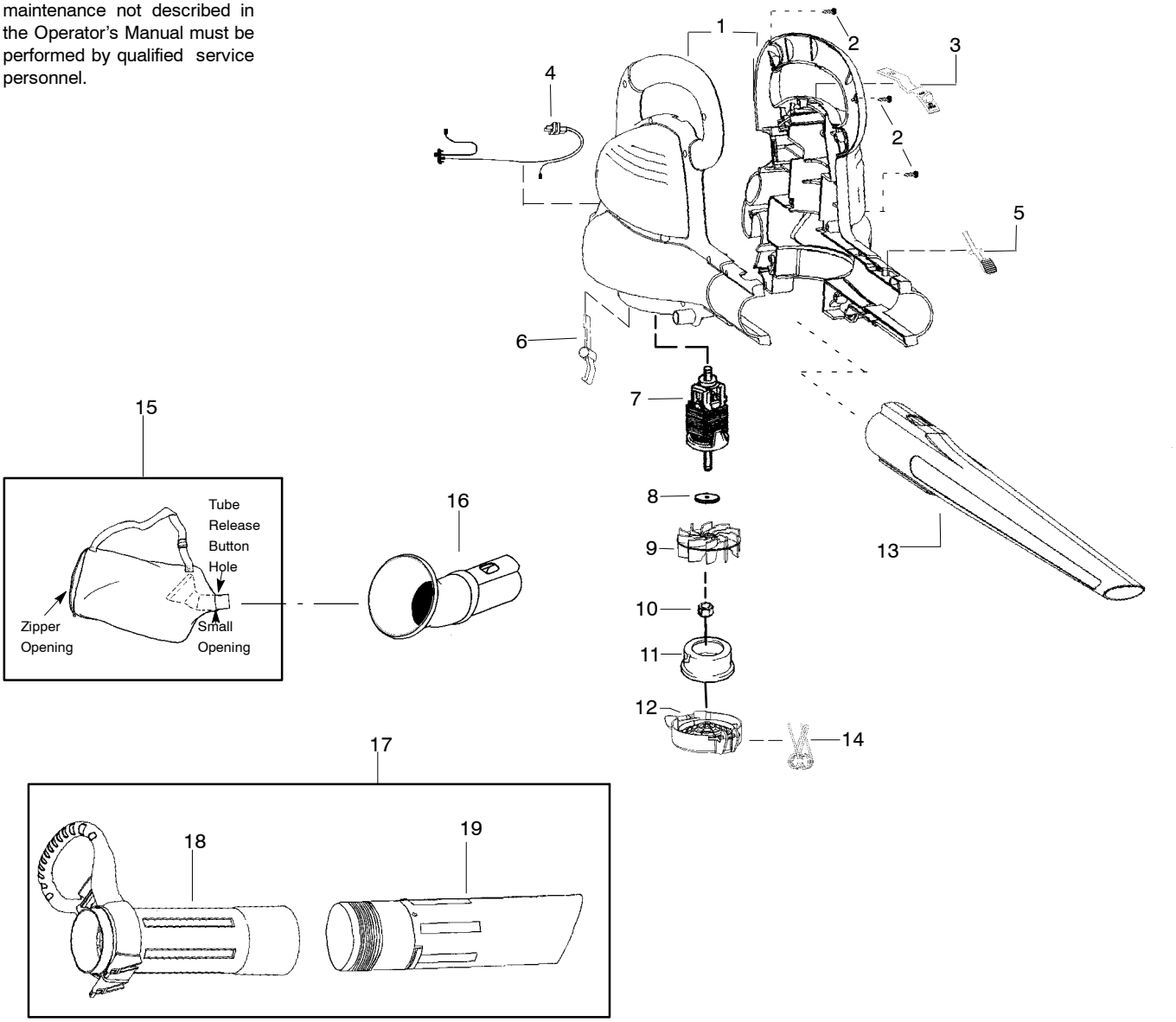

Ref.	Part No.	Description	Ref.	Part No.	Description
1.	530404401	Housing Set (incl. #5)	14.	530403833	Spring - Door
2.	530016120	Screw	15.	530095599	Assy. - Vac Bag
3.	530403764	Cover - Switch	16.	530403769	Attachment-Vac Bag
4.	530403778	Assy. Wiring Harness (incl. switch)	17.	530403989	Kit-Upper/Lower Tube w/handle
5.	530403775	Button - Tube Latch	18.	530403842	Tube - Upper Vac w/handle
6.	530403790	Button - Door Latch	19.	530403850	Tube - Inlet Vacuum
7.	530403770	Assy. Motor			
8.	530403834	Washer			
9.	530403771	Impeller			
10.	530403776	Nut - Impeller	Not Shown		
11.	530403791	Restrictor - Inlet			
12.	530403788	Door - Vacuum Inlet		530165112	Manual - Operator's
13.	530404358	Tube - Blower		530403871	Decal - Warning

✓ = NEW PART NUMBER FOR THIS IPL

★ = REFER TO THE SERVICE REFERENCE INDICATED FOR MORE INFORMATION. (LOCATED AT END OF IPL)