Husqvarna

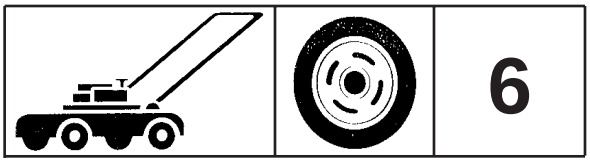

HVT 2000

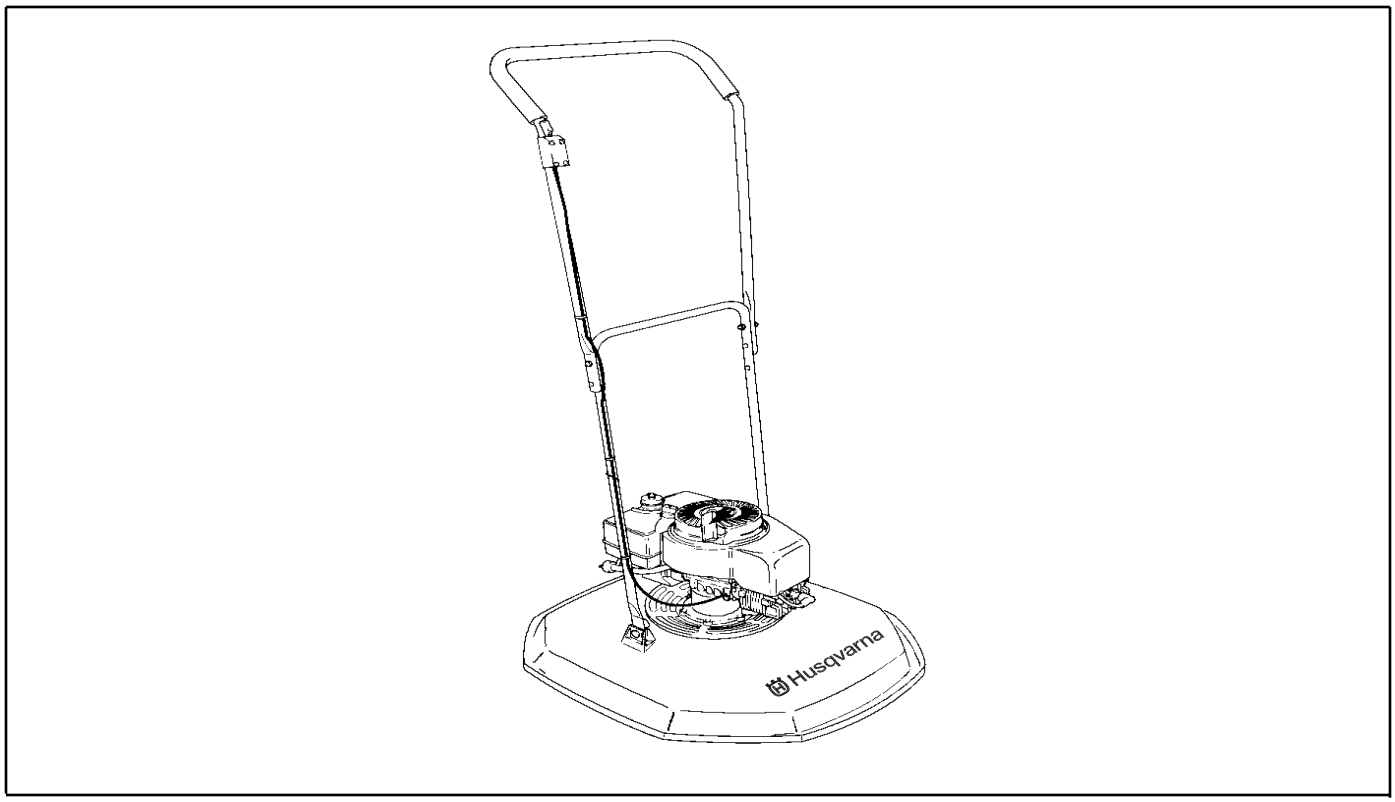

1.1997

Spare Parts
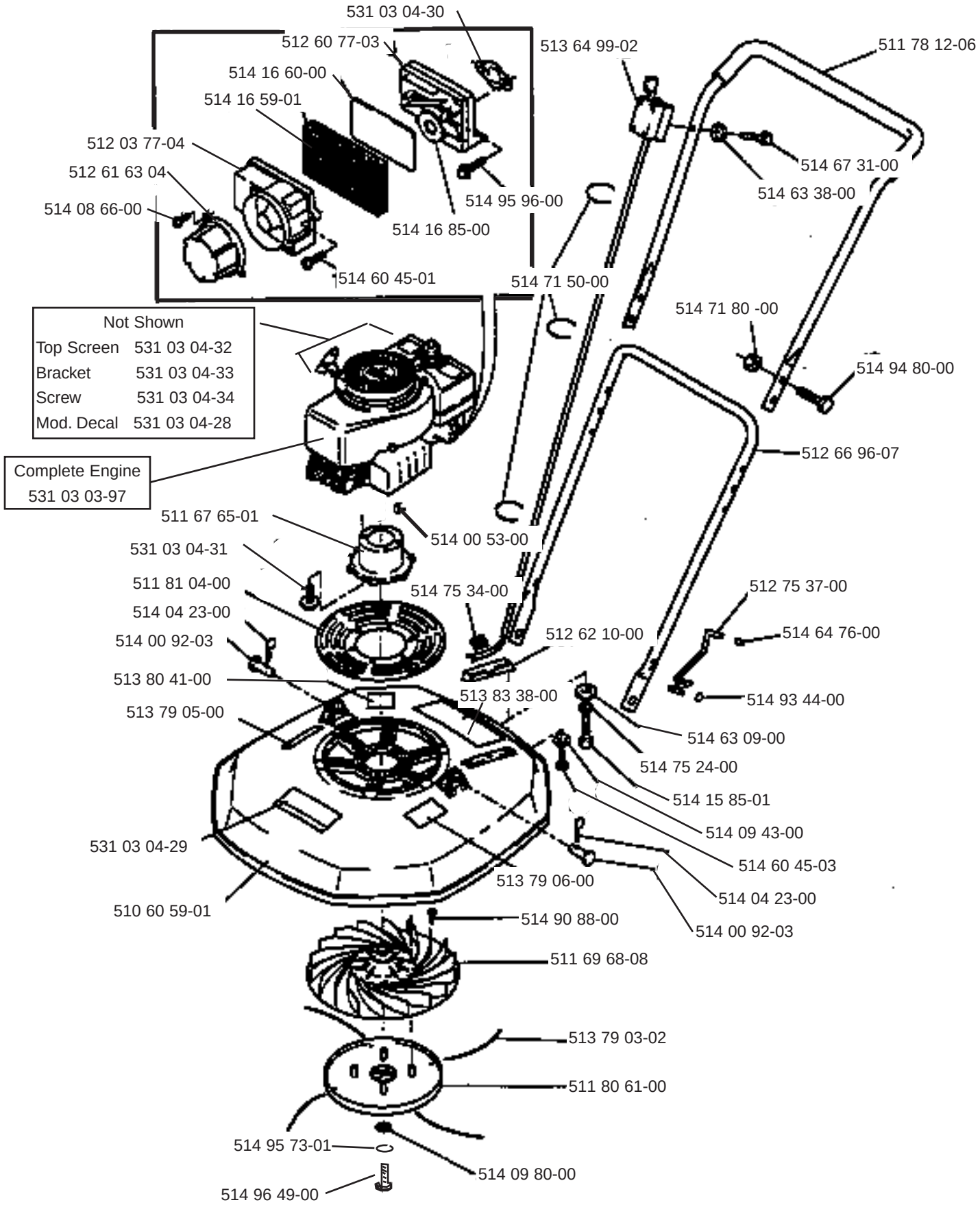
HOVERING TRIMMER
HVT 2000 963 10 54-93 20” cutting width